SPECIFICATION FOR APPROVAL

PAD LAYOUT: (UNIT: mm)

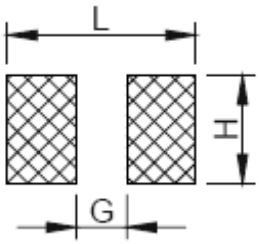

ITEM	L (Ref.)	G (Ref.)	H (Ref.)
SDI103R	10.7	7.3	3.6
SDI104R	10.7	7.3	3.6
SDI105R	10.7	7.3	3.6
SDI106R	10.7	7.3	3.6

PACKAGING QUANTITY: (UNIT: mm)

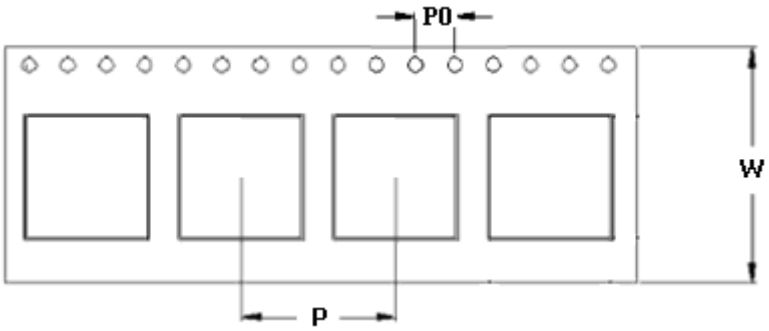

TYPE	P	P0	W	BULK	PCS / REEL
SDI103R	16 ± 0.1	4.0 ± 0.1	24 ± 0.3	v	1000
SDI104R	16 ± 0.1	4.0 ± 0.1	24 ± 0.3	v	1000
SDI105R	16 ± 0.1	4.0 ± 0.1	24 ± 0.3	v	500
SDI106R	16 ± 0.1	4.0 ± 0.1	24 ± 0.3	v	500

SPECIFICATION FOR APPROVAL

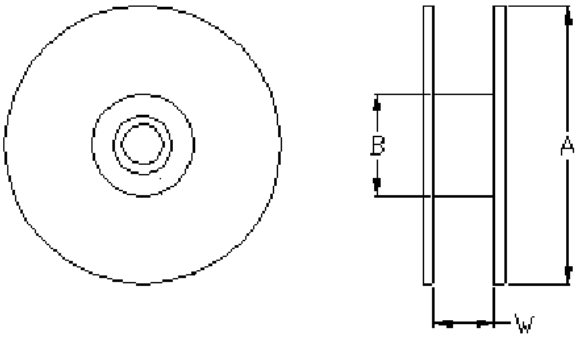

TYPE	A	B	W
SDI103R	330	100	24.5
SDI104R	330	100	24.5
SDI105R	330	100	24.5
SDI106R	330	100	24.5

SPECIFICATION FOR APPROVAL

RELIABILITY AND TEST CONDITIONS:

<table>
<tr><th>Item</th><th>Performance</th><th>Test Condition</th></tr>
<tr><td>Operating Temperature</td><td>-40~+125℃</td><td></td></tr>
<tr><td>Rated Current</td><td>Refer to standard electrical characteristics list.</td><td></td></tr>
<tr><td>Temperature Rise Test</td><td>40℃ max. (Δt)</td><td></td></tr>
<tr><td>Solder heat Resistance</td><td>Appearance: No significant abnormality.
Inductance change: Within ± 30%.</td><td>Preheat:150℃,60sec.
Solder : H63A
Solder tamperature:260+0-5℃
Flux: rosin
Dip time:10sec. Max.
 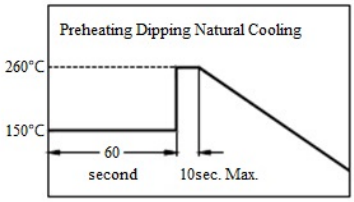
</td></tr>
<tr><td>Thermal shock</td><td rowspan="3">Appearance: no damage
Inductance: within±30%of initial value.</td><td>Condition for 1 cycle
Step1:-25±2℃ 30±3 min.
Step2:Room temperature 15 min.
Step3:+85±5℃ 30±3 min.
Step4:Room temperature 15 min.
Number of cycles:50
<table><tr><th>Phase</th><th>Temperature(℃)</th><th>Time(min)</th></tr><tr><td>1</td><td>-25±2℃</td><td>30±3</td></tr><tr><td>2</td><td>Room Temp.</td><td>15</td></tr><tr><td>3</td><td>+85±2℃</td><td>30±3</td></tr><tr><td>4</td><td>Room Temp.</td><td>15</td></tr></table></td></tr>
<tr><td>Humidity Resistance Test</td><td>Measured:50 times
Temperature:40±2℃.
Applied current: rated current.
Duration:500 hrs.
Humidity:90~95%</td></tr>
<tr><td>High Temperature Resistance Test</td><td>Temperature:85±2℃.
Applied current: rated current.
Duration:500 hrs.</td></tr>
</table>